Flapper type area flowmeter

Flaptor®

Showa Showa Instrument Informaion Co.,Ltd.

Flaptor® series

Compact flowmeter for water, oil, and various liquids.

Please select the models shown below according to customer demand.

Metal type

Local indicator
Model FM-0350

Corrosion proof PVC type

Local indicator with reed swith
Model FE-0360

Metal type specially for low flow rate

Local indicator with reed swith
Model FE-0365

Flow direction (Please specify the flow direction on ordering.)

Four flow directons are available as shown below.

Left ▶ Right

Right ▶ Left

Down ▶ Up

Up ▶ Down

This mounting configuration is not recommanded for liquids.

Local indicator case must not be mounted upward.

<Attention>

Countermeasure that prevents water through the terminal box should be done,for example, cover the terminal box with waterproof tape. In the case of the cable entrance of the box upward, a trap or drain should be attached to prevent water entry. Repair fee for the malfunction should be paid if countermeasure is not placed at the customer spot.

Showa

Features

Local indicator with reed switch FE-0360

■ Flexible selection of flow direction!

Either vertical or horizontal direction is available. Designate the flow direction on ordering.

■ Easy maintenance!

When cleaning the Flaptor inside, just taking the cover flange out, not necessary to take the Flaptor body out from piping.

■ Small space is enough for installation!

No need of straight pipe right before Flaptor.

■ High durability!

Simple structure and all metal body.

■ Application to flow switch!

Model FE-0360 has a reed switch with long lifetime.

Pictures of Flaptors with various diameter pipe

200A FE-0360 Left→Right

125A FM-0350 Down→Up

80A FE-0360 Right→Left

50A FE-0360 Up→Down

▶FM-0350 (Local indicator)

■Metal type

■PVC type

■The mechanical specifications

1	Structure	Waterproof
2	Accuracy	±3%F.S.
3	Range ability	10:2 (some exceptions)
4	Temperature range of measuring fluids	FM-0350 -20～+120℃ FE-0360 -20～+120℃ PVC type 0～+40℃
5	Flange standard	JIS 10K
6	Maximum operation pressure	Metal type 1MPa PVC type 0.3MPa
7	Scale range	Refer to page 8 and 9.
8	Configuration	Left→Right / Right→Left Down→Up / Up→Down
9	Indicator case	Case body ADC12 Case cover Reinforced plastic Case color Semi gloss black
10	Body	Body material Metal type Below100A SS400/SCS14 Above125A SS400/SGP PVC type PVC
		Main parts matetial Metal type SUS304/SCS14 PVC type Spring:SUS316 coated by ETFE Shaft:SUS316 coated by FEP and FRP
		Color Metal type Gray PVC type Gray
11	Indicator mechaninsm	Magnet coupling

■Options are as following

1	Flange standard	JIS 5K 16K JPI 150# 300# ASME 150# 300# NDS 5K 10K High pressure use JIS 20K
2	High temperature use	FM-0350 -20～+200℃ FE-0360 -20～+200℃
3	Material which touches fluid	Below100A SUS304/SCS14 SUS316/SCS14 Above125A SUS304 SUS316

■Drawings of metal and PVC type

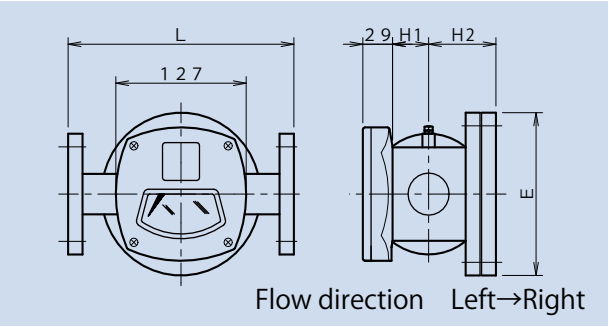

▶FE-0360 (Local indicator with reed switch)

— This model is applicable to flow switch for water supply failure —

Metal type

PVC type

Electrical specifications

(Mechanical specifications are the same as FM-0350.)

1	Numbers of switches	1 or 2
2	Switch type	Self-holding type reed swith
3	ON/OFF setting of swith	Select among the 4 cases below. ON above the set point ON below the set point OFF above the set point OFF below the set point
4	Setting of flow rate	Changeable within the scale range
5	Hysteresis	7%F.S.
6	Contact rating	Switching voltage MAX 220V Switching current MAX 0.5A Switching capacity MAX 50VA (Do not exceed each ratings)
7	Contact resistance	Below 400mΩ
8	Insulation resistance	Above 100MΩ
9	Withstand voltage	1500V AC for 1 minute between the terminal and the aluminum case
10	Terminal box construction	Waterproof Connection G1/2

Circuit diagram

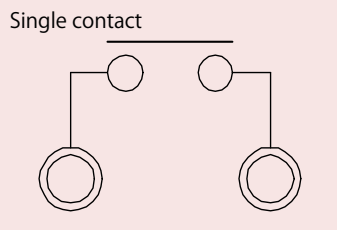

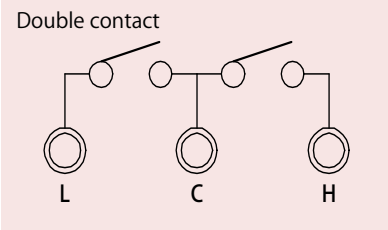

Drawings of metal and PVC type

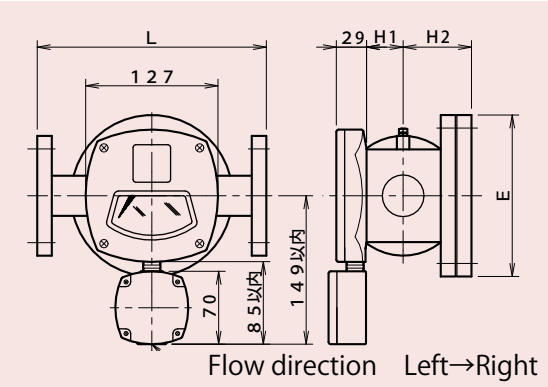

Operating principal and feature of reed switch

The two electrodes attach each other when the driving magnet approaches to the switch box while they datach when the magnet apart from the box.

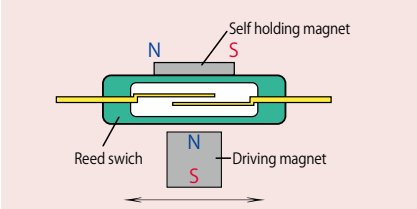

A reed switch has a long lifetime because the electrodes operate in the glass tube filled with inertgas.

▶FM-0355,FE-0365(Small flow rate series)

■FM-0355

■FE-0365

■Drawings of FM-0355 and FE-0365

FM-0355 type
Flow direction Left→Right

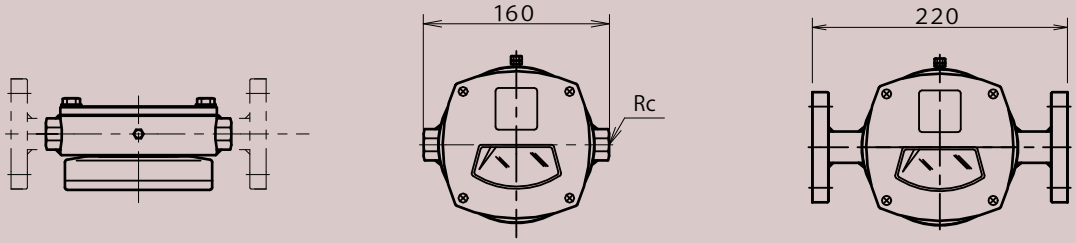

Screw type

Flange type

FM-0355 (Local indicator)

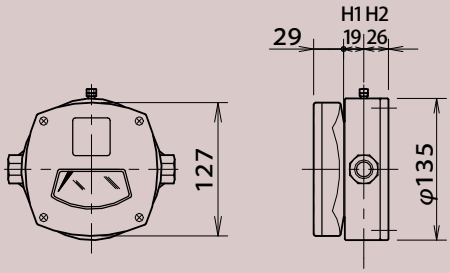

Flow direction Left→Right

FE-0365 (Local indicator with reed switch)

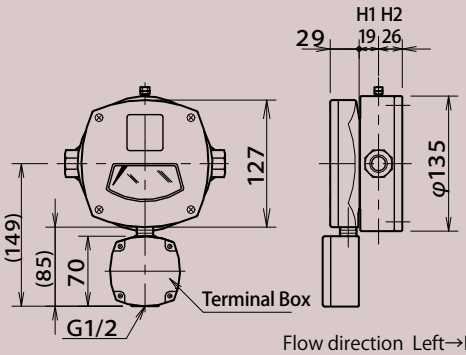

Flow direction Left→Right

■Preparation for slurry before installation

In the case that fluid contains foreign matters, install an over-60-mesh strainer in front of the entrance side of flowmeter.
(See the right figure.)

■Body specification

(Indicator part specification is the same as FM-0350.)

1	Model and function	FM-0355 Local indicator FE-0365 with Reed switch
2	Diameter	15A
3	Conevtion	Screw type Rc1/2 Flange type 15A JIS10KFF
4	Maximum operating pressure	Screw type 1.0MPa Flange type JIS10K 1.0MPa
5	Accuracy	±3%F.S.
6	Range ability	10：2 (some exceptions)
7	Fluid temperature	FM-0355 −20～+120℃ FE-0365 −20～+120℃
8	Scale range	Reter to page 9
9	Configuration	Left→Right / Right→Left Down→Up / Up→Down
10	Exterior	Body No painting Case Semi gloss black
11	Material	Main body SUS304 O ring NBR
12	Weight	Screw type 4.2kg Flange type 5.6kg

■Example of horizontal installation

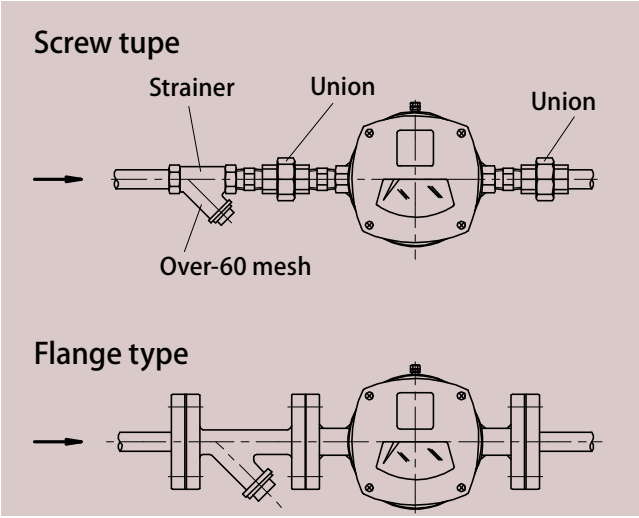

■Options are as following

1	Material of contact parts	Body SUS316
2	High temperature	FM-0355 200℃ FE-0365 200℃
3	Diameter	20A 25A
4	Flange rating	Maximum operating pressure：1.0MPa JPI 150Lb-RF ANSI 150Lb-RF
		Maximum operating pressure：2.0MPa JIS 20K-FF JPI 300Lb-RF ANSI 300Lb-RF

■Maximum scale value range

Water flow rate	400～1200l/h
Other fluids	Contact us.

■Operation principal

Figure A.1 shows the schematic cross-section of Flaptor body. The measurement principle of Flaptor is basically the same as that of variable area flowmeter.

When liquid/gas flow hits the flapper, the flapper rotates towards downstream due to the differential pressure, as the pressure in the upstream side is higher than that of the downstream. The flapper simultaneously receives the force of the spring placed in the hinge so that it rotates towards the upstream. Thus, the flapper is stabilized at the position where the difference pressure force is in balance with the spring force.

As shown in Fig. A.2, the flapper magnetically couples with the pointer in the indicator portion which is placed outside of the body.

The flapper angle varies depending on the amount of fluid passing through the space between the flapper and the liner. As the liner is specially designed, the flapper angle and the pointer angle vary proportionally to the flow rate. The mechanism achieves the indicator where the scale spacing of scale plate is almost equal.

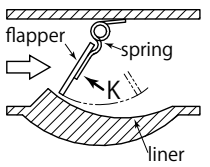

Fig A.1

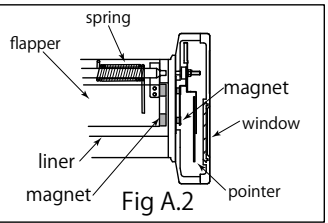

Fig A.2

Basic equation

As the Flaptor principle is mentioned above, the flow rate equation of Flaptor is very similar to that of the conventional variable area flowmeter, as shown below.

$$Q = cA\sqrt{\frac{2g\ K}{Af\ \gamma}}$$

Q : volume flow rate
c : flow coefficient
A : fluid passing area
g : gravitational acceleration
K : spring force
A_f : flapper area
γ : fluid density

Correction equation

The scale marks on the scale plate are customized, namely, fabricated according to the customer designated parameters such as fluid density, viscosity, temperature, and pressure. Customers need to correct the pointer indicating flow rate on the scale plate, when operating the Flaptor under the conditions different from the design parameters.

Q : corrected volume flow rate
C_Q : correction factor
Q_O : pointer indicating flow rate in volume

$$Q = Qo \cdot CQ$$

The influence of liquids density

When the fluid density at operating condition is different from the design density, the correction factors can be written as follows.

γ : fluid density at operating condition
γ_o : design fluid density

$$CQ = \sqrt{\frac{\gamma o}{\gamma}}$$

▶Table of available scale range for water flow rate measurement using metal type FM-0350 and FE-0360

Unit	【L/min】						
Nominal Diameter	15A	20A	25A	32A	40A	50A	65A
Selectable scale range min. ~ max.	5 ~ 25	5 ~ 25					
	6 ~ 30	6 ~ 30					
	8 ~ 40	8 ~ 40					
	10 ~ 50	10 ~ 50	10 ~ 50				
			12 ~ 60	12 ~ 60	12 ~ 60		
			15 ~ 80	15 ~ 80	15 ~ 80	15 ~ 80	
			20 ~ 100	20 ~ 100	20 ~ 100	20 ~ 100	
				25 ~ 120	25 ~ 120	25 ~ 120	
					30 ~ 150	30 ~ 150	
					40 ~ 200	40 ~ 200	40 ~ 200
						50 ~ 250	50 ~ 250
						60 ~ 300	60 ~ 300
							80 ~ 400
							100 ~ 500
							120 ~ 600
Nominal Diameter	80A	100A	125A	150A	200A	250A	300A
Selectable scale range min. ~ max.	40 ~ 200						
	50 ~ 250	50 ~ 250					
	60 ~ 300	60 ~ 300					
	80 ~ 400	80 ~ 400					
	100 ~ 500	100 ~ 500	100 ~ 500				
	120 ~ 600	120 ~ 600	120 ~ 600				
	150 ~ 800	150 ~ 800	150 ~ 800	150 ~ 800			
		200 ~ 1000	200 ~ 1000	200 ~ 1000			
		250 ~ 1200	250 ~ 1200	250 ~ 1200	250 ~ 1200		
		300 ~ 1500	300 ~ 1500	300 ~ 1500	300 ~ 1500	300 ~ 1500	
			400 ~ 2000	400 ~ 2000	400 ~ 2000	400 ~ 2000	400 ~ 2000
			500 ~ 2500	500 ~ 2500	500 ~ 2500	500 ~ 2500	500 ~ 2500
				600 ~ 3000	600 ~ 3000	600 ~ 3000	600 ~ 3000
					800 ~ 4000	800 ~ 4000	800 ~ 4000
					1000 ~ 5000	1000 ~ 5000	1000 ~ 5000
					1200 ~ 6000	1200 ~ 6000	1200 ~ 6000
						1500 ~ 8000	1500 ~ 8000

Unit	【㎥/h】						
Nominal Diameter	15A	20A	25A	32A	40A	50A	65A
Selectable scale range min. ~ max.	0.3 ~ 1.5	0.3 ~ 1.5					
	0.4 ~ 2	0.4 ~ 2					
	0.5 ~ 2.5	0.5 ~ 2.5					
	0.6 ~ 3	0.6 ~ 3	0.6 ~ 3				
			0.8 ~ 4	0.8 ~ 4	0.8 ~ 4	0.8 ~ 4	
			1 ~ 5	1 ~ 5	1 ~ 5	1 ~ 5	
			1.2 ~ 6	1.2 ~ 6	1.2 ~ 6	1.2 ~ 6	
				1.5 ~ 8	1.5 ~ 8	1.5 ~ 8	
					2 ~ 10	2 ~ 10	
					2.5 ~ 12	2.5 ~ 12	2.5 ~ 12
						3 ~ 15	3 ~ 15
						4 ~ 18	4 ~ 20
							5 ~ 25
							6 ~ 30
							8 ~ 36
Nominal Diameter	80A	100A	125A	150A	200A	250A	300A
Selectable scale range min. ~ max.	2.5 ~ 12						
	3 ~ 15	3 ~ 15					
	4 ~ 20	4 ~ 20					
	5 ~ 25	5 ~ 25					
	6 ~ 30	6 ~ 30	6 ~ 30				
	8 ~ 40	8 ~ 40	8 ~ 40	8 ~ 40			
	10 ~ 50	10 ~ 50	10 ~ 50	10 ~ 50			
		12 ~ 60	12 ~ 60	12 ~ 60			
		15 ~ 80	15 ~ 80	15 ~ 80	15 ~ 80	15 ~ 80	
		20 ~ 100	20 ~ 100	20 ~ 100	20 ~ 100	20 ~ 100	20 ~ 100
			25 ~ 120	25 ~ 120	25 ~ 120	25 ~ 120	25 ~ 120
			30 ~ 150	30 ~ 150	30 ~ 150	30 ~ 150	30 ~ 150
				40 ~ 200	40 ~ 200	40 ~ 200	40 ~ 200
					50 ~ 250	50 ~ 250	50 ~ 250
					60 ~ 300	60 ~ 300	60 ~ 300
					80 ~ 400	80 ~ 400	80 ~ 400
						100 ~ 500	100 ~ 500
							120 ~ 600

▶Table of available scale for water flow rate measurement using PVC type FM-0350 and FE-0360

Unit	【L/min】							
Nominal Diameter	25A	40A	50A	65A	80A	100A	125A	150A
Selectable scale range min. ~ max.	8 ~ 40							
	10 ~ 50	10 ~ 50						
	12 ~ 60	12 ~ 60	12 ~ 60					
	15 ~ 80	15 ~ 80	15 ~ 80					
		20 ~ 100	20 ~ 100					
		25 ~ 120	25 ~ 120					
		30 ~ 150	30 ~ 150					
		40 ~ 200	40 ~ 200	40 ~ 200	40 ~ 200			
			50 ~ 250	50 ~ 250	50 ~ 250			
				60 ~ 300	60 ~ 300	60 ~ 300		
				80 ~ 400	80 ~ 400	80 ~ 400	80 ~ 400	
				100 ~ 500	100 ~ 500	100 ~ 500	100 ~ 500	
				120 ~ 600	120 ~ 600	120 ~ 600	120 ~ 600	120 ~ 600
						150 ~ 800	150 ~ 800	150 ~ 800
						200 ~ 1000	200 ~ 1000	200 ~ 1000
						250 ~ 1200	250 ~ 1200	250 ~ 1200
						300 ~ 1500	300 ~ 1500	300 ~ 1500
							400 ~ 2000	400 ~ 2000
								500 ~ 2500

Unit	【㎥/h】							
Nominal Diameter	25A	40A	50A	65A	80A	100A	125A	150A
Selectable scale range min. ~ max.	0.4 ~ 2							
	0.6 ~ 3	0.6 ~ 3						
	0.8 ~ 4	0.8 ~ 4	0.8 ~ 4					
	1 ~ 5	1 ~ 5	1 ~ 5					
		1.2 ~ 6	1.2 ~ 6					
		1.5 ~ 8	1.5 ~ 8					
		2 ~ 10	2 ~ 10					
		2.5 ~ 12	2.5 ~ 12	2.5 ~ 12	2.5 ~ 12			
			3 ~ 15	3 ~ 15	3 ~ 15			
				4 ~ 20	4 ~ 20	4 ~ 20		
				5 ~ 25	5 ~ 25	5 ~ 25	5 ~ 25	
				6 ~ 30	6 ~ 30	6 ~ 30	6 ~ 30	
					8 ~ 40	8 ~ 40	8 ~ 40	8 ~ 40
						10 ~ 50	10 ~ 50	10 ~ 50
						12 ~ 60	12 ~ 60	12 ~ 60
						15 ~ 80	15 ~ 80	15 ~ 80
						20 ~ 100	20 ~ 100	20 ~ 100
							25 ~ 120	25 ~ 120
								30 ~ 150

▶Table of available scale range for water flow rate measurement using metal type FM-0355 and FE-0365

Unit	【L/min】
Nominal Diameter	15A・20A・25A
Selectable scale range min. ~ max.	1.5 ~ 8
	2 ~ 10
	2.5 ~ 12
	3 ~ 15
	4 ~ 20

Unit	【㎥/h】
Nominal Diameter	15A・20A・25A
Selectable scale range min. ~ max.	0.08 ~ 0.4
	0.1 ~ 0.5
	0.12 ~ 0.6
	0.15 ~ 0.8
	0.2 ~ 1
	0.25 ~ 1.2

▶Other

Ask us in the following cases.

- Fluids except water
- Unit except L/min , ㎥/h

Table of dimension and mass of Flaptors with various flange diameters

Relationship among Diameter-Dimension-Mass

Diameter	Dimension mm							Mass kg	
	L	Metal type		PVC type		E			
		H1	H2	H1	H2	Metal type	PVC type	Metal type	PVC type
15A	220	30	56	-	-	155	—	7	—
20A	220	30	56	-	-	155	—	7	—
25A	220	36	61	51	74	155	135	8	2.6
32A	220	36	66	-	-	155	—	9	—
40A	220	41	71	56	79	155	135	9	3.0
50A	220	46	76	60	83	155	135	10	3.3
65A	260	56	93	76	96	200	160	16	5.0
80A	300	61	98	82	103	200	191	17	6.1
100A	330	101	118	108	135	235	220	25	9.1
125A	380	100	130	119	140	265	280	33	14.3
150A	480	130	151	148	174	330	350	58	27.0
200A	650	150	193	-	-	400	—	84	—
250A	680	175	213	-	-	445	—	123	—
300A	720	200	245	-	-	490	—	153	—

Precautions and Warranty

General Preacautions

We make every effort to ensure that our products are manufactured and tested under strict quality control before shipment. To use our products safely for a long time, please follow the precautions below:

・Read the instruction manual thoroughly before using the product.

・Avoid installing or keeping the product in a place subject to:
direct sunlight, snow and ice, strong impact and vibration, high temperature and humidity, corrosive atmosphere, flooding

・Our products are designed and manufactured to be used as general industrial measuring instruments. Do not use our products for equipment that could affect human life.

・Use our products within the conditions described in the catalogs or specifications. Using our products out of the conditions may result in damage or malfunction.

Disclaimer

We assume no responsibility for any of the following damage:

・Damage caused by the factors attributed to non-customers such as natural disasters, fire, and third parties' conducts, or by those attributed to customers such as mishandling, intentional act, negligence, and unauthorized modification/ repair.

・Secondary damage caused by defects in our products.
This includes damage to relevant facilities and lost business opportunities.

・Corrosion of wetted parts cauesd by fluids
Customers are responsible for checking compatibility between fluids and wetted part materials.

・Other damages for which we should not be held responsible.

Coverage / Warranty Period

・In the event that our product is found to be defective within the warranty period, we will repair or replace the relevant product free of charge.

Showa Instrument Informaion Co.,Ltd.

Sales 6-4-17 Higashi-Koujiya, Otaku, Tokyo, Japan
TEL +81 03-6756-0601 FAX +81 03-6756-0602

Head office・Factory 6-4-17 Higashi-Koujiya, Otaku, Tokyo, Japan
TEL +81 03-3745-3361 FAX +81 03-3745-3395

URL http://www.showa-kk.com E-mail eigyo@showa-kk.com

Nov. 2020